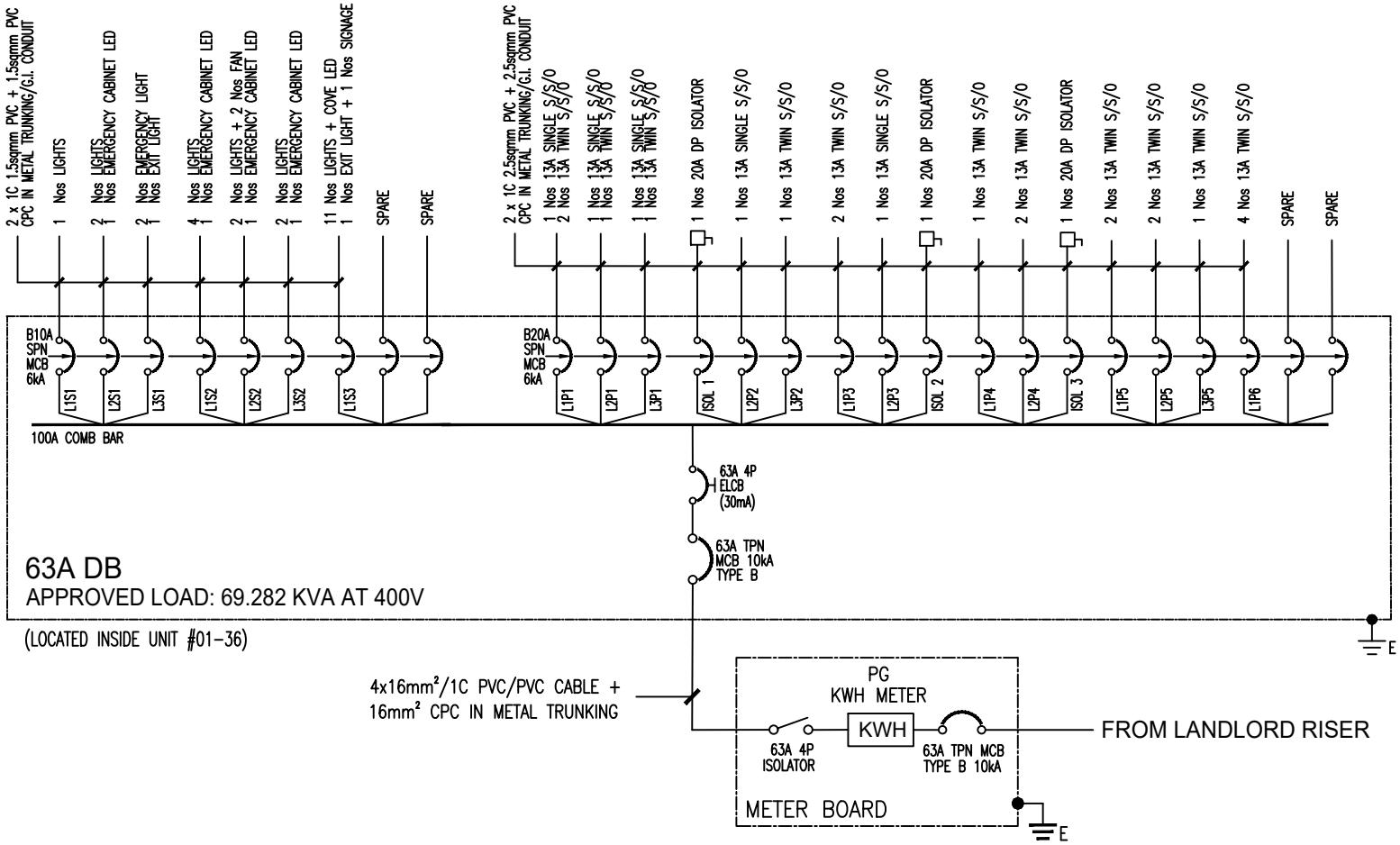

CLIENT / ADDRESS :	MAIN CONTRACTOR :	ELECTRICAL CONTRACTOR :	DRAWING TITLE :	LEW :	CHECKED :	DATE :
ULTIMED HEALTHCARE CLINICS BLK 824 TAMPINES STREET 81 #01-36	FIRE SOLUTIONS ENGINEERING PTE LTD	NEWSPACE INTERIOR PTE LTD 6D MANDAI ESTATE, #09-06 SINGAPORE 729938	SINGLE LINE DIAGRAM (SLD)			7 APR 2025
					DRAWING NO. : NSI_UHC_TAM_01	REV : 0